REVISIONS				
SYM.	DESCRIPTION	DATE	APPROVAL	DRAFT
A	ADDED YH-60 TO N/A BLOCK	9-18-57	W.P. Miller	KEYS
B	SEE E.O. 204AA-2273	12-2-57		F. GREEN
C	CHG 1/4 TO SHOW HU-1 & ADDED HU-1A	1-29-59		F. GREEN

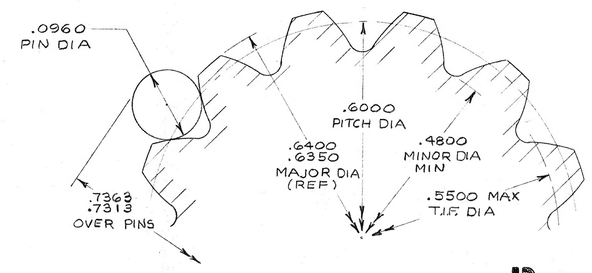

ENLARGED VIEW OF SPLINE B

FLAT OR FILLET ROOT ~ OPTIONAL

SIDE FIT

SCALE = 10 TIMES SIZE

NUMBER OF TEETH ____ 12 CIRCULAR PITCH ____ .1571
DIAMETRAL PITCH ____ 20/40 BASE CIRCLE DIA ____ .5196
PRESSURE ANGLE ____ 30°

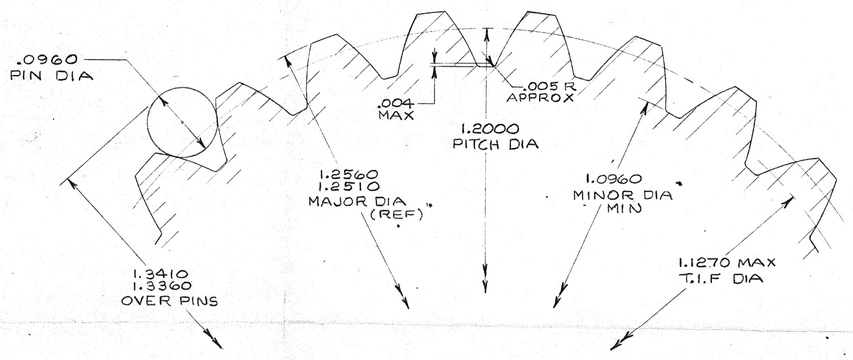

ENLARGED VIEW OF SPLINE C

FLAT ROOT ~ SIDE FIT

SCALE = 10 TIMES SIZE

NUMBER OF TEETH ____ 24 CIRCULAR PITCH ____ .1571
DIAMETRAL PITCH ____ 20/30 BASE CIRCLE DIA ____ 1.0392
PRESSURE ANGLE ____ 30°

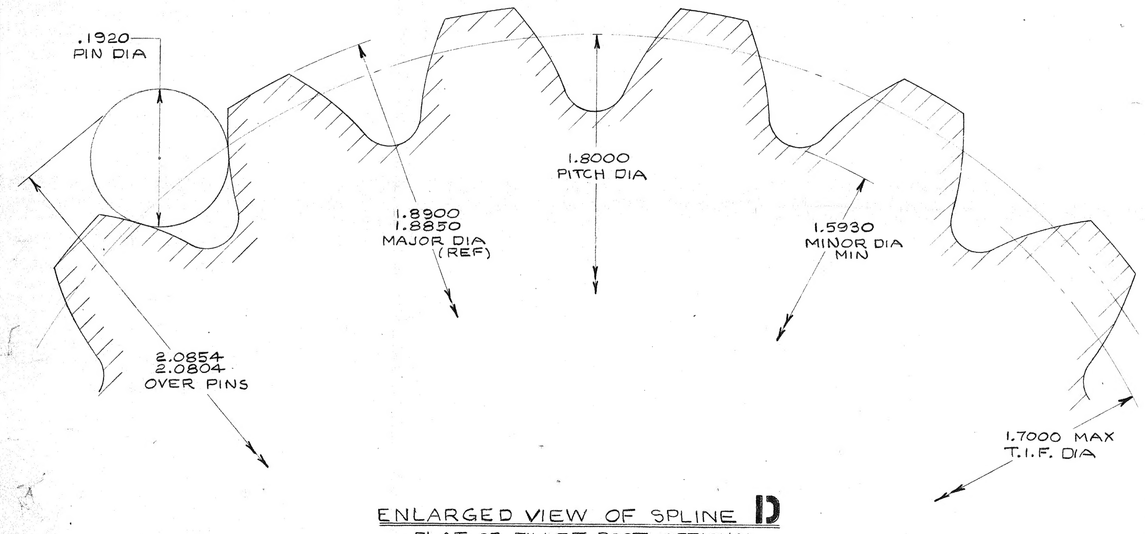

ENLARGED VIEW OF SPLINE D

FLAT OR FILLET ROOT ~ OPTIONAL

SIDE FIT

SCALE = 10 TIMES SIZE

NUMBER OF TEETH ____ 18 CIRCULAR PITCH ____ .3142
DIAMETRAL PITCH ____ 1960 BASE CIRCLE DIA ____ 1.5588
PRESSURE ANGLE ____ 30°

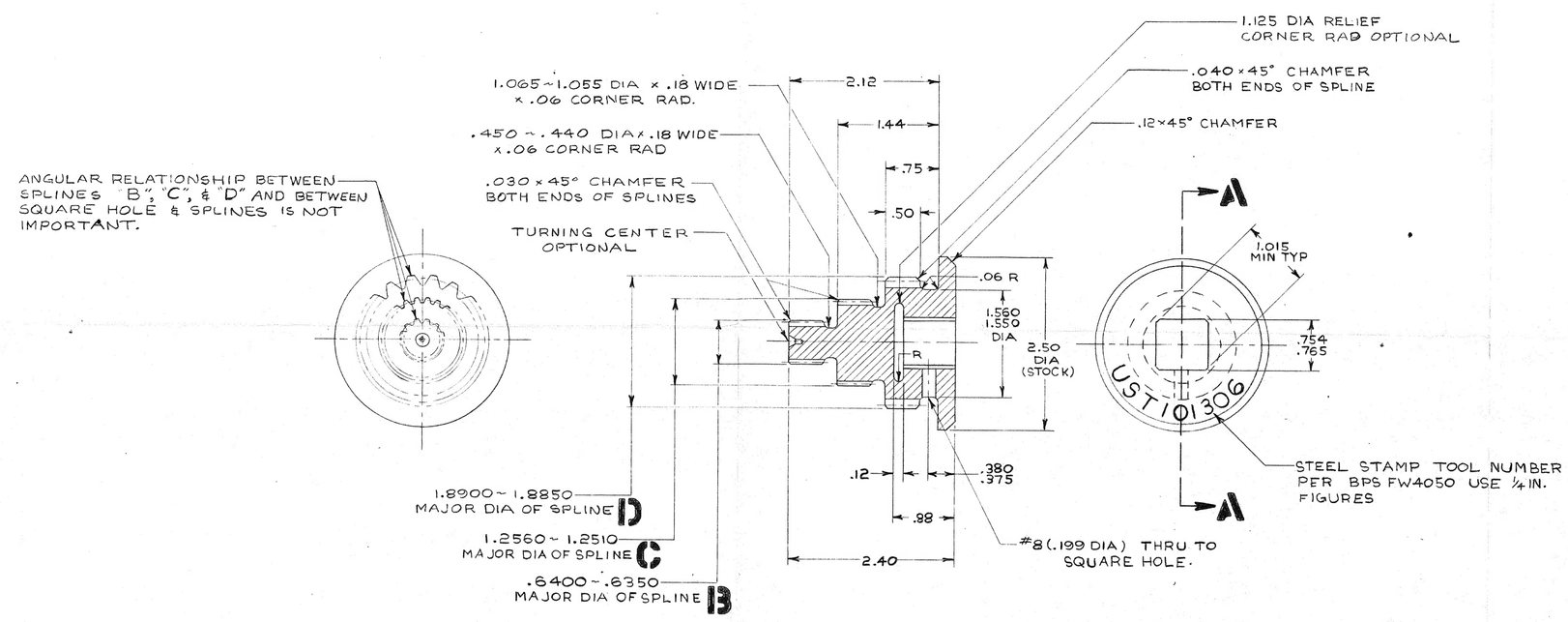

SECTION A-A

TOOL USAGE BLOCK							
COLUMN	V2	V3	V4	V5	V6	V7	V8
PARAGRAPH	REMARKS	TOOL NO.	OPERATION	PART NUMBER & NAME	OPERATION	PART NUMBER & NAME	OF ASSEMBLY NO.
I		T101306	INSTALL REMOVE	204-040-184 NUT	ON FROM	204-040-100 PINION	204-040-203
II		T101306 T101305	INSTALL REMOVE	204-040-186 NUT	ON FROM	204-040-121 SHAFT	204-040-205
III		T101306 T101305	INSTALL REMOVE	204-040-230 NUT	ON FROM	204-040-105 PINION ASSY	204-040-208
(B) IV		T101306 T101305	INSTALL REMOVE	204-040-186 NUT	ON FROM	204-040-121 SHAFT	204-040-213
(B) V		T101306 AN8516-1	INSTALL REMOVE	204-040-252 NUT	ON FROM	204-040-114 GEAR	204-040-213

FILE COPY

SECURITY CLASSIFICATION

T101306

C

FOR VENDOR'S USE ONLY

THIS DRAWING IS THE PROPERTY OF BELL AEROSYSTEM CO. NOT TO BE REPRODUCED FOR ANY PURPOSE NOR SHOWN OR THE CONTENTS REVEALED TO PERSONS OTHER THAN EMPLOYEES OF THE COMPANY RECEIVING THIS DRAWING WITHOUT THE WRITTEN CONSENT OF BELL AEROSPACE CO.

NO./ASSY.	FLAG NOTE	PART NUMBER	PART NAME	COMMERCIAL / MATERIAL	STOCK	SPEC. NO. / GOVT. SPEC.	STEEL CODE CLASS, TYPE, COND. ETC.	DIA.	THICK	WIDTH	LGTH.	TENSILE 1000 PSI	MAT. / FINISH	CHEM. FILM / TREAT	ORGANIC FINISHES	COLOR	ALT. MATL.	UNIT WT.	ZONE
		T101306	WRENCH	STEEL 4130	BAR	MIL-S-6758	COND D-4 2 1/2				2.7		FE / CODE 299-099-081	C82			5G1		

LIST OF MATERIAL

DASH NO.	NEXT ASSY.	USED ON	NEXT ASSY.	FINAL ASSY.	QTY. REQD.
	204-040-213	HU-1A	REF	REF	
	204-040-208	HU-1A	REF	REF	
	204-040-203	HU-1A	REF	REF	
	204-040-213	HU-1	REF	REF	

DASH NO.	NEXT ASSY.	USED ON	NEXT ASSY.	FINAL ASSY.	QTY. REQD.
	204-040-208	HU-1	REF	REF	
	204-040-203	HU-1	REF	REF	
	204-040-208	YH-40	REF	REF	
	204-040-213	YH-40	REF	REF	
	204-040-203	YH-40	REF	REF	
	204-040-208	XH-40	REF	REF	
	204-040-208	XH-40	REF	REF	
	204-040-203	XH-40	REF	REF	

(2) HEAT TREAT TO 160,000 ~ 180,000 P.S.I. T.S. ROCKWELL Rc 36-40.

1. BREAK SHARP EDGES .015 APPROX

NOTES:

SUPERSEDES

SUPERSEDED BY

UNLESS OTHERWISE SPECIFIED DIMENSIONS ARE IN INCHES
TOLERANCES ON DECIMALS: X ± .1, XX ± .03, XXX ± .010; ANGLES ± 1/2°
MACHINED SURFACES 125
BMS EXCEPT AS NOTED
FINISH
SPEC.

	NAME	DATE
DRAFTSMAN	F. GREEN	9/18/56
DESIGNER	F. GREEN	9/18/56
STRESS	F. CARLSON	9-12-56
CHECKER	R. EDWARDS	9/18/56
WEIGHTS		
GROUP ENG.	J.C. ROSELLE	9-12-56
PROJ. ENG.	R. Burgess	9/18/56
CHIEF ENG.	Lee	1-10-57
	12-24	12/10/56

CAA DES. ENG. REP.

SERVICE PROD. ENG. Bruce Burgess

DWG. SIZE M4

TITLE
WRENCH,
EXTERNAL SPLINE,
TRANSMISSION

BELL Aircraft CORP.
TEXAS DIVISION
FORT WORTH 1, TEXAS

DWG. NO. T101306

SCALE FULL & NOTED | HEAT TREAT BPS FW4140 MIL-H-6875

SHEET 1 OF 1

CNJD FORM NO. E2-514FW